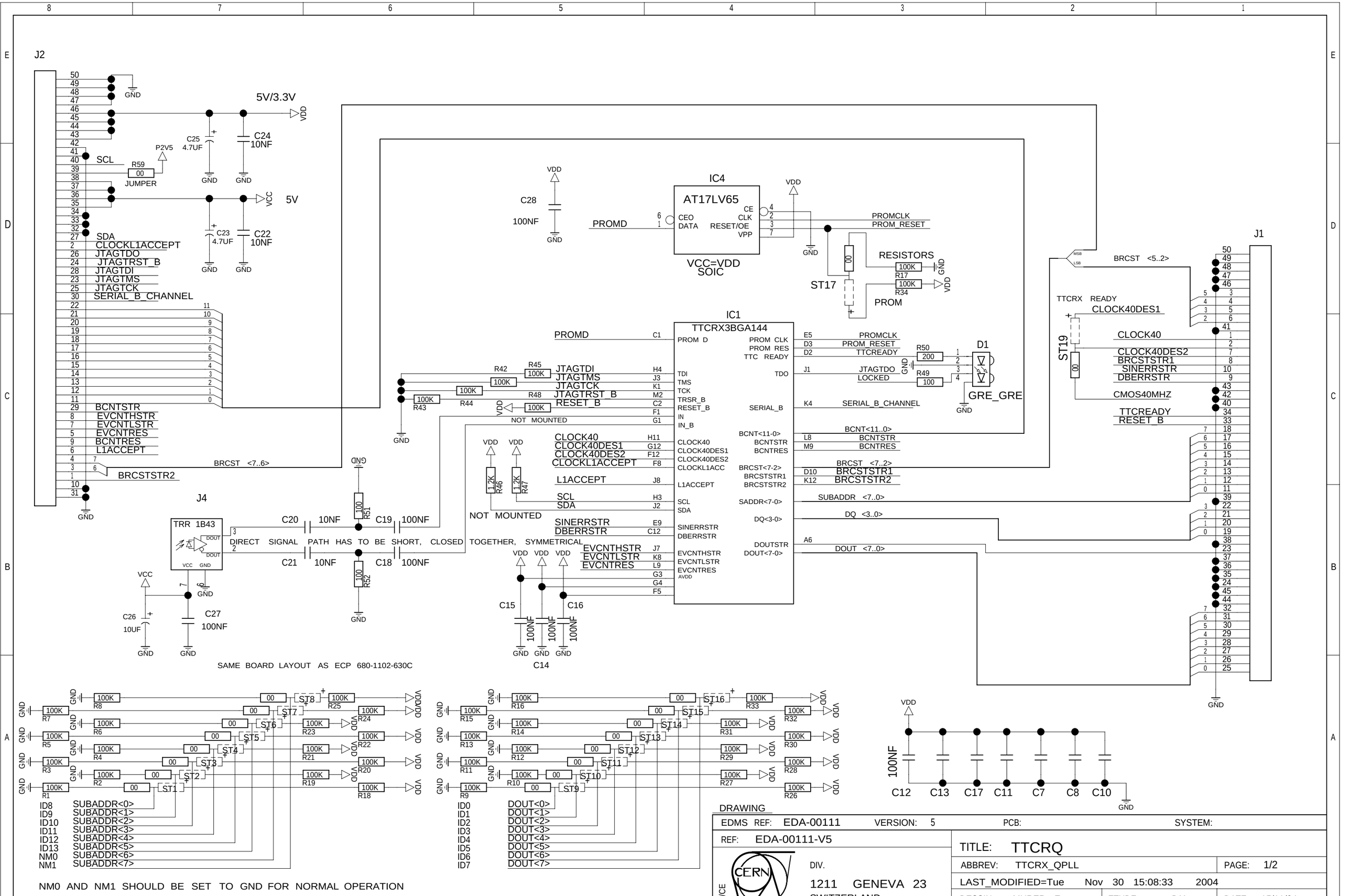

DRAWING

EDMS REF: EDA-00111	VERSION: 5	PCB:	SYSTEM:
REF: EDA-00111-V5	TITLE: TTCRQ		
CERN IT/CE DIV. 1211 GENEVA 23 SWITZERLAND	ABBREV: TTCRX_QPLL		PAGE: 1/2
	LAST_MODIFIED=Tue Nov 30 15:08:33 2004		
	DESSIN: MURER E.	ETUDE: P.M.	DATE: 15/11/04

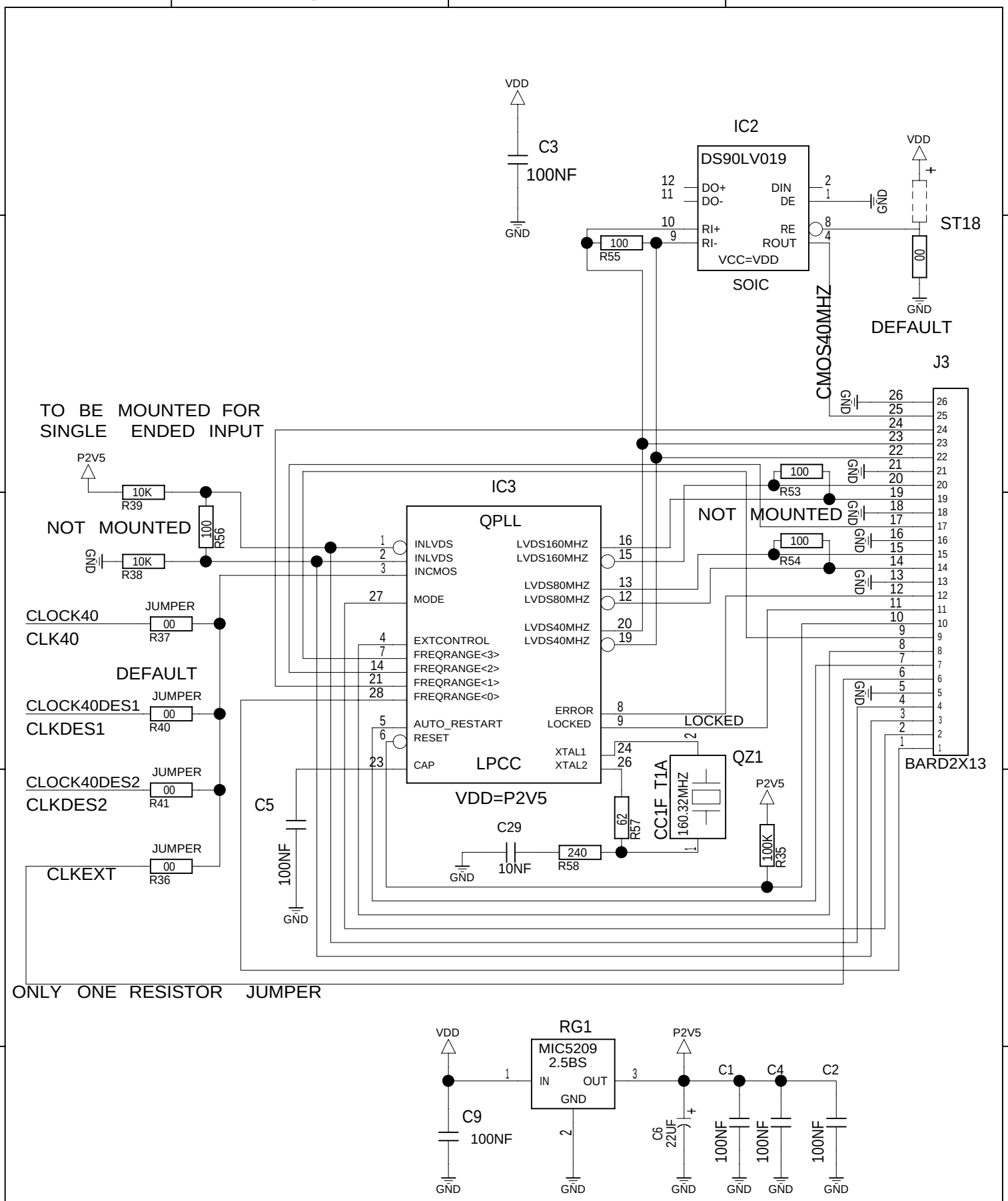

DRAWING

EDMS REF: EDA-00111	VERSION: 4	PCB:	SYSTEM:
REF: EDA-00111-V5	TITLE: TTCRQ		
DIV.	ABBREV:	PAGE: 2/2	
1211 GENEVA 23 SWITZERLAND	LAST_MODIFIED=Mon Jan 03 15:32:42 2005		
IT/CE	DESSIN: MURER E.	ETUDE: P.M.	DATE: 03/01/05